TPM

A member of the Tersus Plc group of companies

DESCRIPTION

Navitas Technologies' line of brushed permanent magnet motor controllers combines the power of high efficiency MOSFETs with micro processor technology to provide flexible, adjustable and reliable control. The PC Probit computer based tuning software allows fast and unique set-up of the TPM400 for each application.

The TPM line of controllers are full H bridge (4 quadrant) motor controllers designed for use with brushed permanent magnet motors with a drive capacity of up to 400A peak at 24 to 48 VDC. TPM controllers offer regenerative braking capabilities and do not require the use of directional contactors. TPM controllers are also user configurable through a CAN interface.

Designed for the rigorous demands of the material handling industry, the TPM family of controllers is also suitable for other applications like automated guided vehicles, aerial lift equipment, burden carriers, airport ground service equipment, utility vehicles, and more.

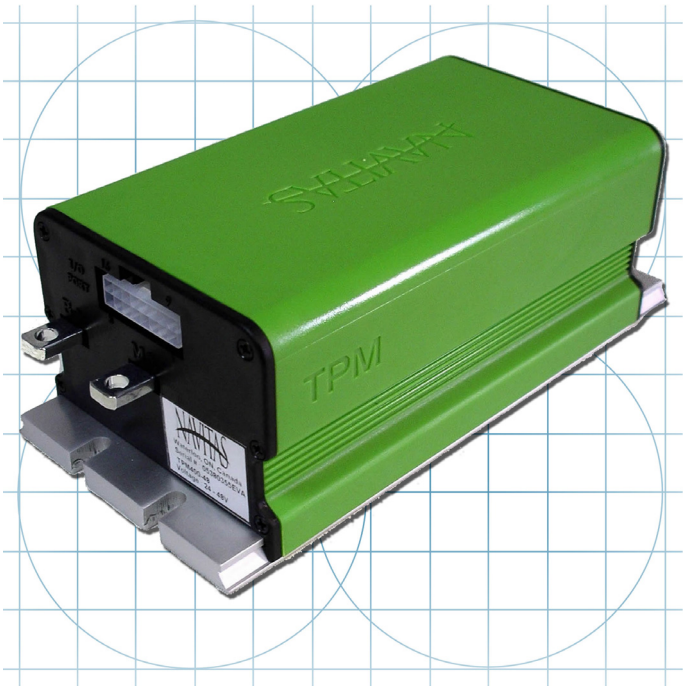

www.navitastechnologies.com

KEY FEATURES

- Contactor-less motor reversing
- Regenerative braking
- Up to 400 amps peak current
- Fully programmable with the Navitas PC Probit programming package
- Safe sequencing and power-up diagnostics
- Battery over-discharge protection
- Current and thermal limiting
- Resistive or voltage throttle input
- Static return to off (SRO) function

BATTERY VOLTAGE

- 24 to 48 Volt DC Input

OUTPUT CAPABILITY

- 400 amps peak armature current
- 200 amps continuous armature current

APPLICATIONS

- Material Handling Equipment
- Burden Carriers
- Automated Guided Vehicles
- Aerial Lift Platforms
- Airport Ground Service Equipment
- Mining Locomotives

Distributed By:

A member of the Tersus Plc group of companies

FEATURES AND BENFITS

Flexibility

- Fully programmable with the Navitas PC Probit computer based programming package
- Adjustable regenerative braking and coasting allows smooth stop and speed reduction functions which improves overall performance
- Adjustable top speeds for both forward and reverse for both normal run operation and during BDI (battery discharge interlock)
- Contactor coil voltages can be lower than battery voltage down to 12 volts DC

Control

- High efficiency MOSFETs provide improvements to low end torque, range and battery life
- Current limiting provides throttle position control over braking to improve drivability
- BDI (battery discharge interlock) intelligence protects battery by limiting the vehicle to a slow run speed
- Forward and reverse switches are not required for bi-directional throttle control
- IR compensation allows for real-time changes in load

Safety

- Power-up diagnostics and safe sequencing prevents unsafe controller operation if the key switch is turned on while the throttle is applied or direction selected
- Thermal protection provides over temperature protection and ensures no damage under any thermal condition
- Static return to off (deadman switch) prevents controller operation if the operator is not in the correct driving position

Communications

- Integrated LEDs flash information and error codes for basic controller diagnostics
- Protected I/O connections
- Internal clocks for key-on and drive-time tracking
- CAN interface allows programming and drive control through CAN network

A member of the Tersus Plc group of companies

DIMENSIONS

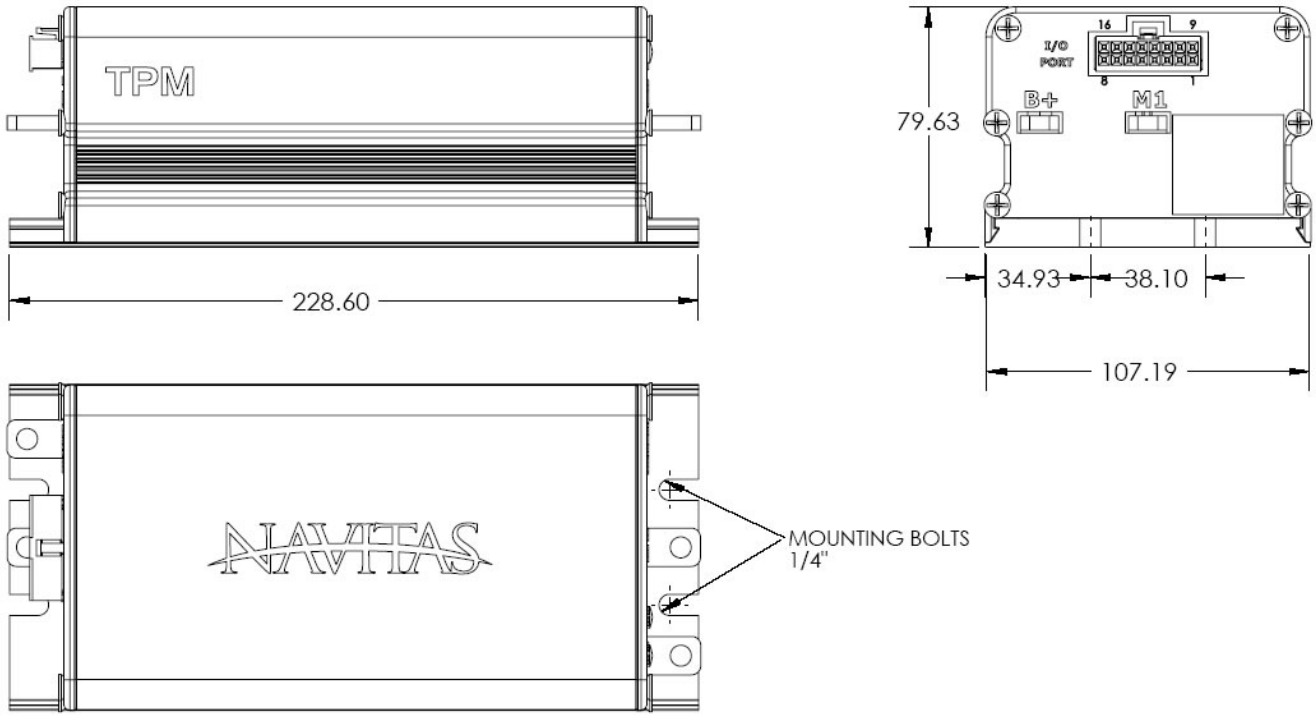

Environmental:	Operating Limits:
• Relative humidity 95%, non-condensing • Vibration 25G • 20kHz switching frequency • Operating Temperature: -30°C to +40°C • Storage Temperature: -40°C to +70°C • Enclosure protected to IP40	• Absolute maximum input voltage 61VDC • Absolute minimum input voltage 16VDC • Thermal limiting begins at 55°C heat-sink temperature • Maximum heat sink temperature 90°C

A member of the Tersus Plc group of companies

TYPICAL WIRING DIAGRAM

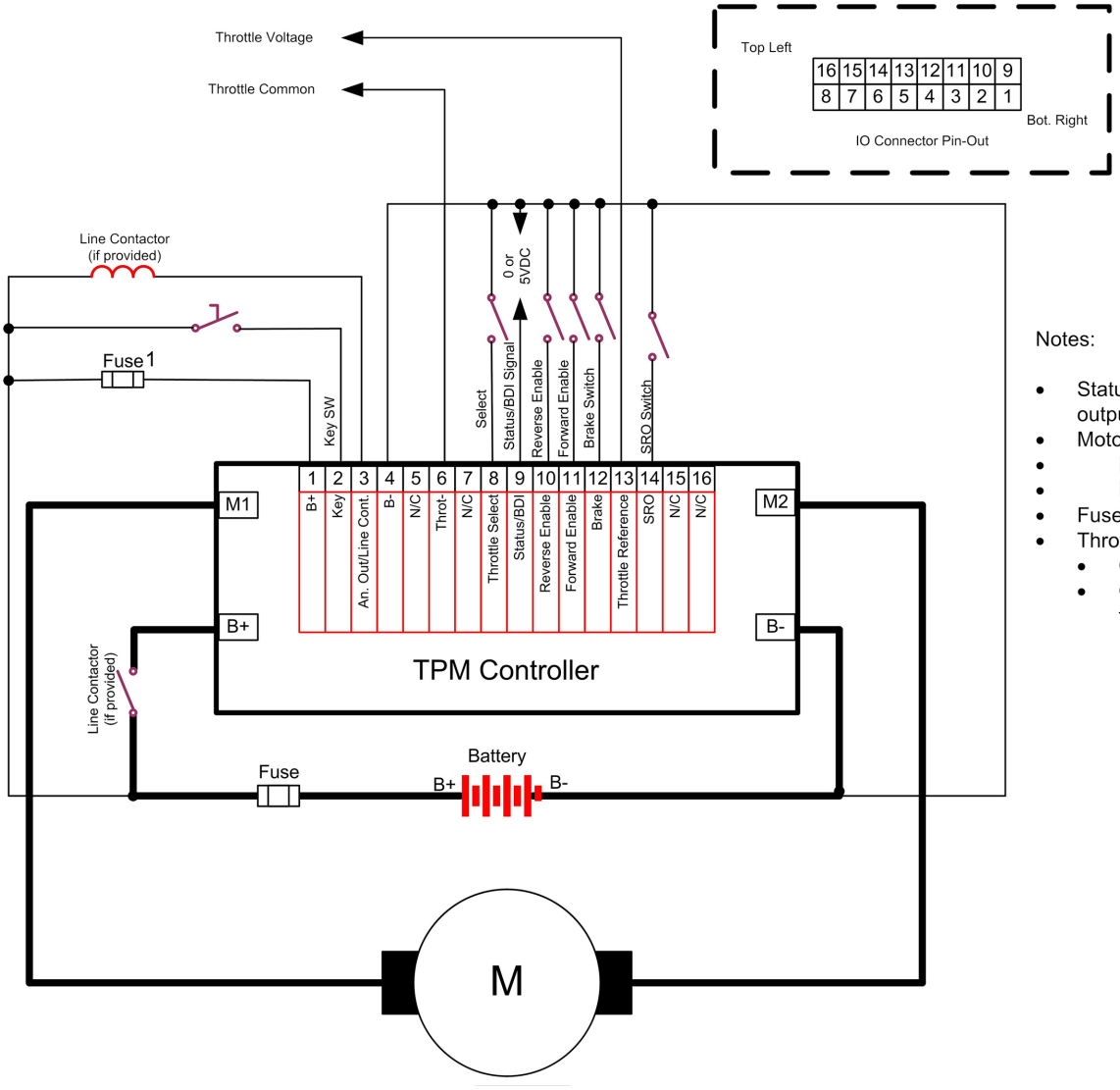

Notes:

- Status signal is a high impedance output 5V logic level
- Motor Direction:
- M2+ -> Forward
- M1+ ->Reverse
- Fuse 1: 1 Amp max
- Throttle Select -> Pin 8
  - GND -> Active Throttle
  - Open -> Resistive Throttle (0 to 5k or 5k to 0)

A member of the Tersus Plc group of companies

MODEL CHART

Model	System Voltage	Peak Armature Rating	Continuous Rating	Throttle Types
TPM400-48	24-48	400 amps	200 amps	0-5k/v ,5-0k/v, Bi-Directional
TPM400-48I	24-48	400 amps	200 amps	+/- 5v and +/- 10v Bi-directional

Note: Specifications are subject to change without notice.

Navitas Technologies Ltd.
C-855 Trillium Drive,
Kitchener, Ontario N2R 1J9 Canada
Phone: 1-519-725-7871
Fax: 1-519-725-1645
www.navitastechnologies.com
info@navitastechnologies.com

Navitas Technologies (NVT) is in the business of designing, manufacturing and marketing digital drive and hydraulic control systems for electric vehicles. NVT control systems are used in battery powered industrial and commercial vehicles ranging from 96 volt locomotives to 12 volt walkies. NVT's product advantages lie in its efficiency, flexible programmability and reliability. NVT also offers application assistance to help design the best overall solution for your vehicle. NVT is a subsidiary of Tersus Energy Plc. For more information on Tersus please visit www.tersusenergy.com.