PART NO.	DOC110-004

BATTERY VDC	12-48v	72v
FUSE VDC RATING	60v	100v

SPM with REVERSE

NO PLUG BRAKE WITH SERIES MOTOR

CAUTION: THE FORWARD - REVERSE FUNCTION REQUIRES AN ELECTRICAL OR MECHANICAL INTERLOCK TO PREVENT SWITCHING UNDER POWER (VEHICLE ROLLING WITH MOMENTUM)

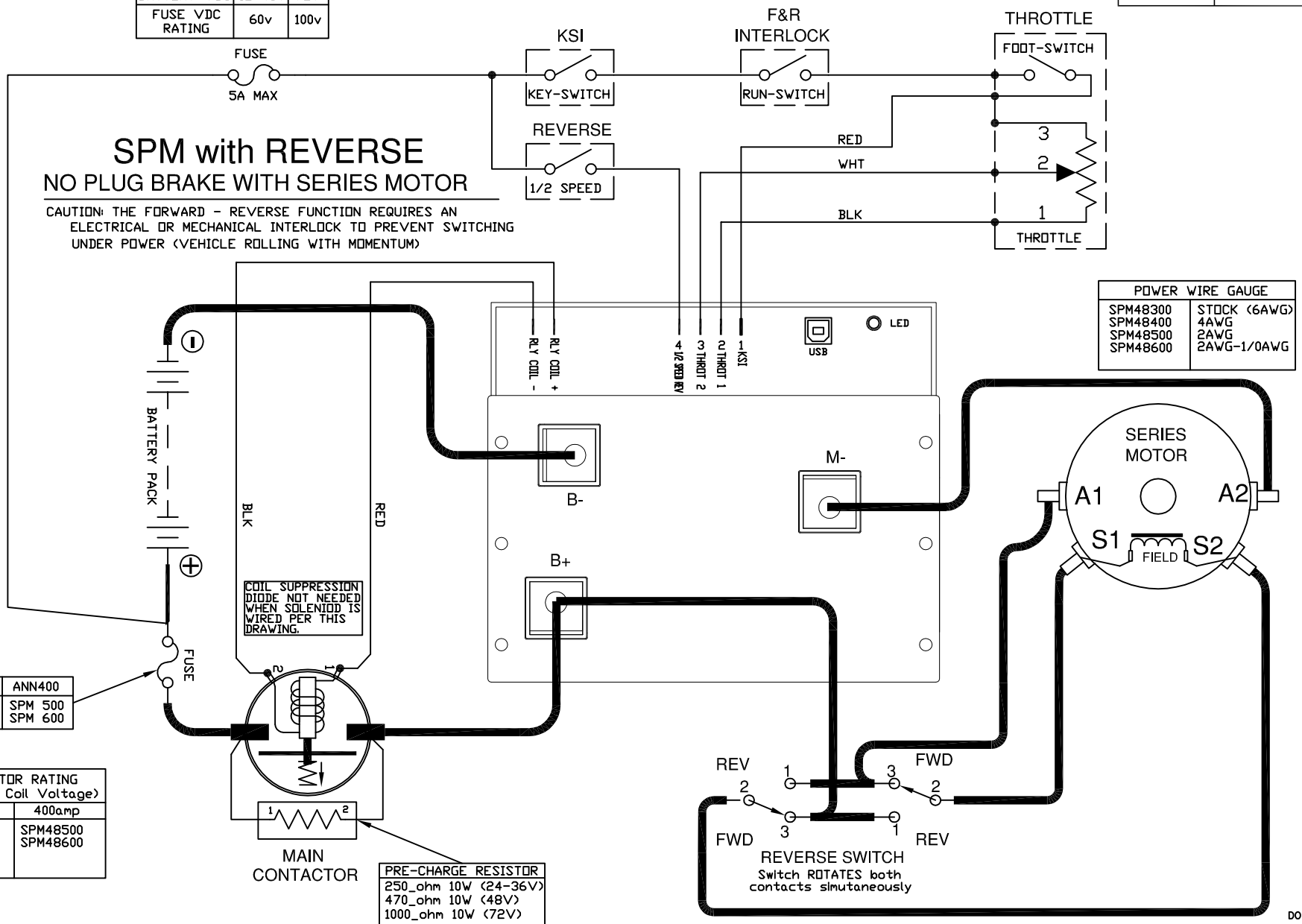

POWER WIRE GAUGE	
SPM48300	STOCK (6AWG)
SPM48400	4AWG
SPM48500	2AWG
SPM48600	2AWG-1/0AWG

ANN250	ANN400
SPM 300 SPM 400	SPM 500 SPM 600

CONTACTOR RATING (Observe Coil Voltage)	
250amp	400amp
SPM48300 SPM48400	SPM48500 SPM48600

PRE-CHARGE RESISTOR
250_ohm 10W (24-36V)
470_ohm 10W (48V)
1000_ohm 10W (72V)

TAB	FUNCTION
1	KSI VOLTAGE
2	THROTTLE
3	THROTTLE
4	1/2 SPEED REVERSE
B+	BATTERY POSITIVE
B-	BATTERY NEGATIVE
M-	MOTOR MINUS

NOTES:

* FUSES REQUIRED FOR ALL INSTALLATIONS
* DIODE REQUIRED ACROSS COILS / RELAYS
* PRE-CHARGE RESISTOR REQUIRED
> ASSUMES FOOTSWITCH IS OPEN WHEN THROTTLE OFF
> ALLTRAX RESERVES THE RIGHT TO CHANGE DOCUMENTATION WITHOUT NOTICE
> ALLTRAX MAKES NO WARRANTY AS TO THE ACCURACY, SUFICIENCY, OR SUITABILITY OF ANY TECHNICAL OR OTHER INFORMATION PROVIDED
> SEE OPERATORS MANUAL FOR MORE INFORMATION

DO NOT SCALE DRAWING

REVISIONS			
REV.	ECO.	DATE	APVD

DWG SCALE: 1:1

DRAWN	RICHARD CSUK	11/15/10
ENGR	DAMON CROCKET	11/15/10

PROPRIETARY
THIS TECHNICAL DATA IS PROPRIETARY TO ALLTRAX INC, AND SHALL NOT BE USED, REPRODUCED, RELEASED, OR DISCLOSED IN WHOLE OR PART WITHOUT WRITTEN PERMISSION OF ALLTRAX INC

ALLTRAX
1111 Cheney Creek Rd.
Grants Pass, OR 97527
PHONE:(541) 476-3565

TITLE
SPM – GENERIC W/ REVERSE
Wiring Diagram

SIZE	DOCUMENT NO.	REV.
A	S DOC110-004	A

FILE: DOC110-004-A_DWG-SPM-GENERIC-REVERSE-WIRE-DIA
SHEET 1 OF 1

Title-Block-Alltrax-A