PART NO.	DOC110-002

SPM/SPB to CLUB CAR DS
Year: 1994-Present

SERIES MOTOR
SPB MODEL SHOWN

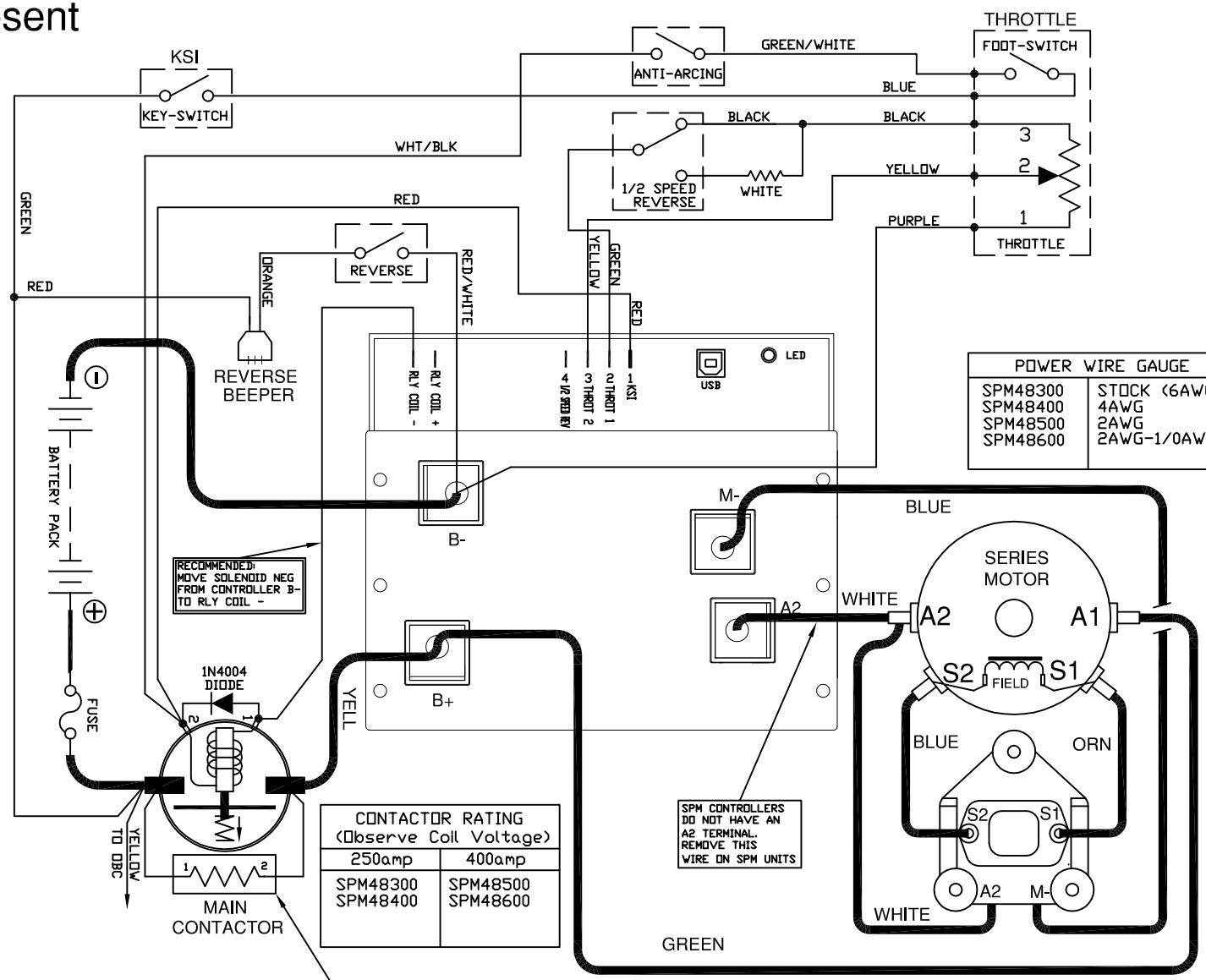

POWER WIRE GAUGE	
SPM48300	STOCK (6AWG)
SPM48400	4AWG
SPM48500	2AWG
SPM48600	2AWG-1/0AWG

TAB	FUNCTION
1	KSI VOLTAGE
2	THROTTLE
3	THROTTLE
4	1/2 SPEED REVERSE
B+	BATTERY POSITIVE
B-	BATTERY NEGATIVE
M-	MOTOR MINUS

CONTACTOR RATING (Observe Coil Voltage)	
250amp	400amp
SPM48300 SPM48400	SPM48500 SPM48600

NOTES:

* FUSES REQUIRED FOR ALL INSTALLATIONS
* DIODE REQUIRED ACROSS COILS / RELAYS
* PRE-CHARGE RESISTOR REQUIRED
> ASSUMES FOOTSWITCH IS OPEN WHEN THROTTLE OFF
> ALLTRAX RESERVES THE RIGHT TO CHANGE DOCUMENTATION WITHOUT NOTICE
> ALLTRAX MAKES NO WARRANTY AS TO THE ACCURACY, SUFICIENCY, OR SUITABILITY OF ANY TECHNICAL OR OTHER INFORMATION PROVIDED
> SEE OPERATORS MANUAL FOR MORE INFORMATION

PRE-CHARGE RESISTOR
250_ohm 10W (24-36V)
470_ohm 10W (48V)
1000_ohm 10W (72V)

DO NOT SCALE DRAWING

REVISIONS			
REV.	ECO.	DATE	APVD

DWG SCALE: 1:1

DRAWN	RICHARD CSUK	11/22/10
ENGR	DAMON CROCKET	11/22/10

PROPRIETARY
THIS TECHNICAL DATA IS PROPRIETARY TO ALLTRAX INC. AND SHALL NOT BE USED, REPRODUCED, RELEASED, OR DISCLOSED IN WHOLE OR PART WITHOUT WRITTEN PERMISSION OF ALLTRAX INC

ALLTRAX
1111 Cheney Creek Rd.
Grants Pass, OR 97527
PHONE:(541) 476-3565

TITLE
SPM/SPB – CLUB CAR DS
Wiring Diagram

SIZE	DOCUMENT NO.	REV.
A	S DOC110-002	A

FILE: DOC110-002-A_DWG-SPM-CLUB-CAR-DS-WIRE-DIA.DWG
SHEET 1 OF 1

Title-Block-Alltrax-A